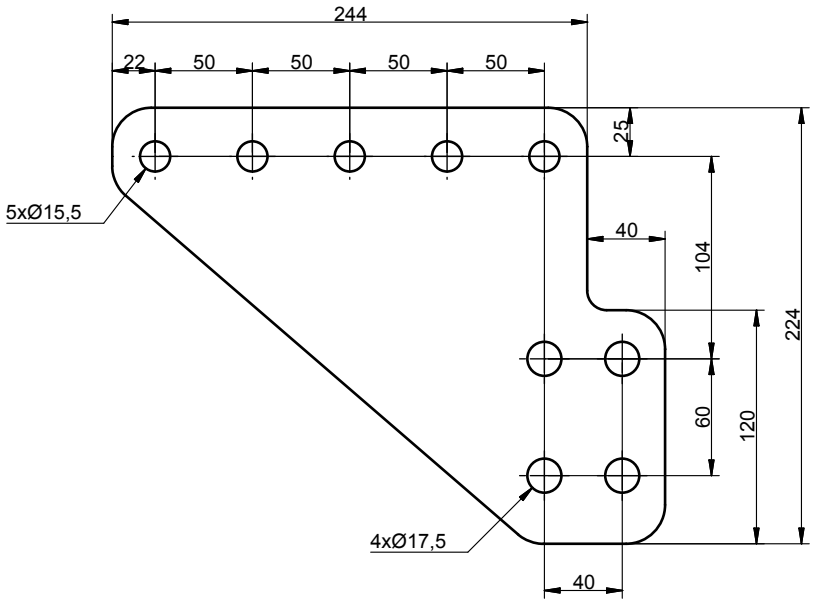


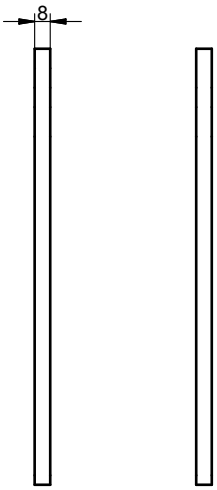


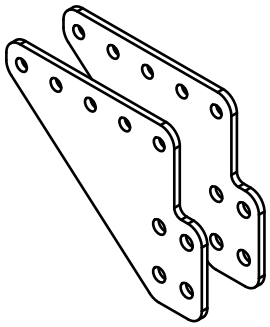

| | | | | |
|---|---|---|---|---|
| Information drawing | Modified Date 2009-02-05 | Modified by JB | Modification No. 10618 | Issue b |
| | 3D Model No. 38-188400 | | Engineer SN | Checked by |
| Description Set of Endplates EUP 50 | Sheet Size A3 / Scale 1:2 / Projection | | Drafting Date 2007-10-16 | Drafted by SN |
| | Stage P | Drawing No. 38-188400 | | |

This drawing is the property of VBG AB and is protected in accordence with prevailing law.
Changes must be made in CAD-program, this concerns both 2D & 3D.